II nd Term 16/02/23 M/S

Reg. No. | | | | | | | | | | |

[22ESEE12]

FIRST SEMESTER B. TECH EXAMINATION, FEBRUARY - 2023

ELECTRICAL AND ELECTRONICS FOR COMPUTATIONAL THINKING

Time: 3 Hours **Maximum Marks: 100**

Instructions:
i. Missing data may be suitably assumed.
ii. Answer all questions

PART – A

5 X 2=10

1.	a.	Find the current flowing through 1 Ω resistance by using Kirchhoff's voltage law. 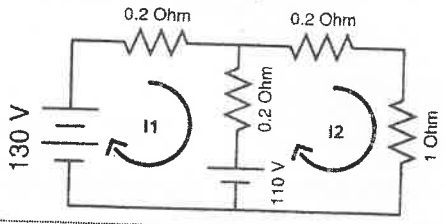	L-1	CO1	02
	b.	A 240 V, 50 Hz AC supply is applied to a coil of 0.08 H inductance and 4 Ω resistance connected in series with a capacitor of 8 μF. Calculate the following. i. Impedance ii. Power consumed 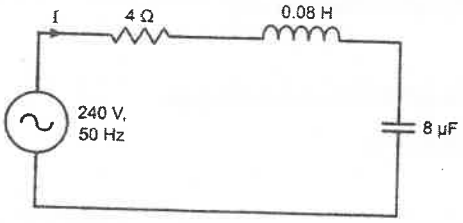	L-1	CO2	02
	c.	Define continuous and discrete time signals.	L-2	CO3	02
	d.	What is a closed loop control system?	L-1	CO4	02
	e.	Define any two fundamental steps in digital image processing?	L-2	CO5	02

PART - B

6 X 5=30

2.	a.	By using Kirchhoff's voltage law (KVL) / Mesh analysis find the current flowing through the 4 Ω resistor 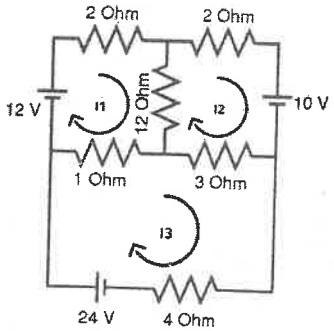	L-2	CO1	05
		OR			
	b.	List the applications of Kirchhoff's Law?	L-1	CO1	05

3.	a.	A wound coil that has an inductance of 180mH and a resistance of 35 Ω is connected to a 100 V 50 Hz supply. Calculate: a) impedance of the coil, b) current, c) power factor, and d) apparent power consumed. Also draw the resulting power triangle for the above coil.	L-2	CO2	05
		OR			
	b.	Define Real, Reactive and Apparent Power with the help of power triangle in AC Circuits. Also, derive power factor with the help of power triangle.	L-2	CO2	05
4.	a.	Find whether the signals are even or odd.: a) $x(t) = e^{-5t}$ b) $x(t) = \sin 2t$ c) $x(t) = \cos 5t$	L-2	CO3	05
		OR			
	b.	Define energy signal and power signal. Also, determine the power and energy of the signal $x(t) = A \sin(\omega_0 t+\varphi)$.	L-2	CO3	05
5.	a.	Define signal processing and hence explain the importance of pre-processing.	L-2	CO4	05
		OR			
	b.	Explain the importance and advantages of grouping.	L-2	CO4	05
6.	a.	Define closed loop control system. Also give the advantages, disadvantages of closed loop control systems.	L-2	CO6	05
		OR			
	b.	Define open loop control system. Also give advantages, disadvantages of open loop control systems.	L-2	CO6	05
7.	a.	Explain important data preprocessing techniques.	L-3	CO5	05
		OR			
	b.	Explain the fundamental steps in digital image processing.	L-3	CO5	05
		PART - C			**6 X 10=60**
8.	a.	Given the voltage sources e_1=20 V, e_2=5 V, and the resistances R1=100 Ω, R2=300 Ω and R3=50 Ω, find all currents through and voltages across the resistors in the circuit. 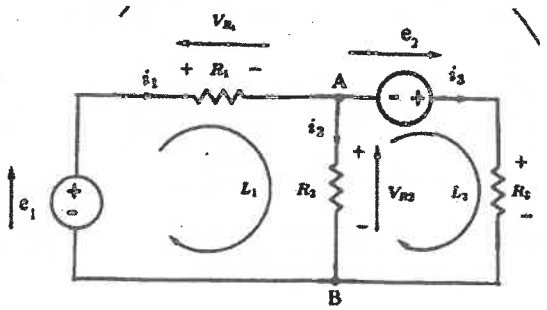 	L-2	CO1	10

		OR			
	b.	Find all currents through and voltages across the resistors in the circuit below, given the voltage sources e_1=20 V, e_2=5 V, and the resistances R1=100 Ω, R2=120 Ω, R3=60 Ω, R4=40 Ω, R5=240 Ω and R6=80 Ω. 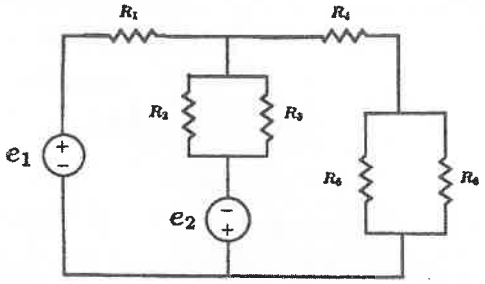	L-2	CO1	**10**
9.	**a.**	An inductor coil having a resistance of 10 Ω and inductance of 50 mH is connected to a 220 V, 50 Hz supply. Calculate the current, real power, reactive power, and apparent power. Draw the power triangle.	L-3	CO2	**10**
		OR			
	b.	Derive the expression for voltage, current and power for a single-phase AC circuit containing R-C connected in series. Draw the necessary waveform and phasor diagrams.	L-3	CO2	**10**
10.	**a.**	What is a signal? Depending upon the nature and characteristics in the time domain explain different signals.	L-2	CO3	**10**
		OR			
	b.	Explain the pre-processing of a signal and list the different types of pre-processing techniques.	L-2	CO3	**10**
11.	**a.**	Determine the fundamental period of the following signals: **i.** x(t)=2cos(2πt/3) + 3cos(2πt/7) **ii.** x[n]=cos2[πn/4]	L-2	CO4	**10**
		OR			
	b.	Define power and energy signals with examples.	L-3	CO4	**10**
12.	**a.**	Explain the basic elements of visual perceptions with clear diagram.	L-2	CO5	**10**
		OR			
	b.	Explain the basic components of image processing system with proper block diagram.	L-2	CO5	**10**
13.	**a.**	Explain the design of control system for air conditioning system.	L-4	CO6	**10**
		OR			
	b.	Describe the design of control system for electrical clothes drier.	L-4	CO6	**10**